931-A-LFDS

Screw/solder terminal strip
Screw/solder tag connection

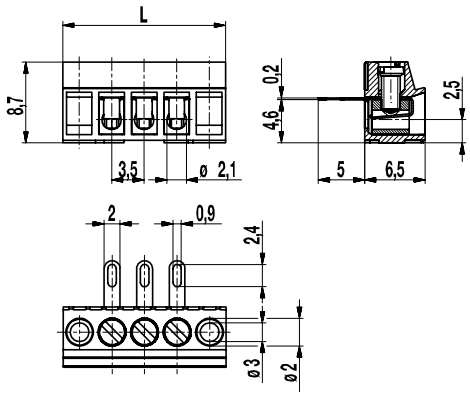

The screw/solder terminal strip 931-A-LFDS with a pitch of 3,5 mm is available in 2- to 12-pole design.
Due to the small pitch, it requires only little mounting space and is therefore well suited for low-voltage applications.

The solder tag is formed as a wire protector. The wire protection reliably prevents damage to multi-wire flexible conductors by the turning screw.

The moulding can also be mounted using the lateral flanges.

Part Numbers

No. of poles	931-A-LFDS	Length	PU
2	20.870.442	14,00	250
3	20.870.443	17,50	100
4	20.870.444	21,00	100
5	20.870.445	24,50	100
6	20.870.446	28,00	100
7	20.870.447	31,50	100
8	20.870.448	35,00	100
9	20.870.449	38,50	100
10	20.870.450	42,00	100
11	20.870.451	45,50	100
12	20.870.452	49,00	100

General Information

Pitch	3,5 mm
No. of poles	2 - 12

Technical Data

Clamping Range	*solid / flexible / AWG*		
	0,34 - 1,5 mm² / 0,34 - 1 mm² / 22 - 16 AWG		
Rated Cross Section	1 mm²		
Wire Stripping Length	5 mm ± 0,5 mm		
Overvoltage Category	III	III	II
Pollution Severity Level	3	2	2
Rated Voltage	100 V	160 V	320 V
Rated Impulse Voltage	2,5 kV	2,5 kV	2,5 kV
Rated Insulation Voltage	130 A acc. to EN 60998-1		
Rated Current	4 A		
Torque	0,25 Nm		

Material

Moulding	PA, grey, V-0
Comparative Tracking Index	CTI ≥ 600
Insulating Group	I
Temperature Range	-40°C up to 100°C
Terminal Body	Nickel plated brass
Screw	M2; zinc plated steel, blue passivated
Wire protector	Tin plated tin bronze

Approvals

	Current [A]	Voltage [V]	Group	AWG	[Nm]
	10	300	B	26 - 16	0,23
	10	300	B	26 - 16	0,2

Options / Accessories

- Consecutive numbering
- Special marking according to drawing
- Self-adhesive marking strip BST-3,50
- Larger number of poles

"no flame" after glow-wire test according to Household Appliance DIN EN/IEC 60335-1