951-A-LFDS

Screw/solder terminal strip
Screw/solder tag connection

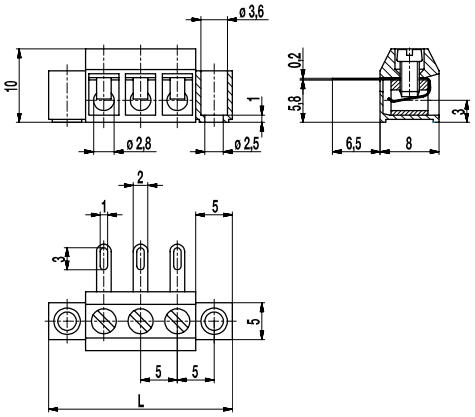

GENERAL INFORMATION

Pitch	5 mm
No. of poles	2 - 12

TECHNICAL DATA

Clamping Range	*solid / stranded / AWG* 0,34 - 2,5 mm² / 0,34 - 2,5 mm² / 22 - 14 AWG		
Rated Cross Section	1,5 mm²		
Wire Stripping Length	6 mm ± 0,5 mm		
Overvoltage Category	III	III	II
Pollution Severity Level	3	2	2
Rated Voltage	160 V	160 V	320 V
Rated Impulse Voltage	2,5 kV	2,5 kV	2,5 kV
Rated Insulation Voltage	130 V acc. to EN 60998-1		
Rated Current	6 A		
Torque	0,4 Nm		

APPROVALS

	Current [A]	Voltage [V]	Group	AWG	[Nm]
	15	300	B	26 - 14	0,4
	15	300	B	26 - 14	0,4

MATERIAL

Moulding	PA, grey, V-0
Comparative Tracking Index	CTI ≥ 600
Insulating Group	I
Temperature Range	-40°C up to 100°C
Terminal body	Nickel plated brass
Screw	M2,6; zinc plated steel, blue passivated
Wire protector	Tin plated tin bronze

OPTIONS / ACCESSORIES

- Marking according to customer requirement
- Self-adhesive marking strip BST-5,00
- Larger number of poles

CONFIGURATIONS

Version	Poles	Item	Article number	Length (L)	PU
Standard	2	951-A-LFDS/02	20.871.252	20,00 mm	250
Standard	3	951-A-LFDS/03	20.871.253	25,00 mm	250
Standard	4	951-A-LFDS/04	20.871.254	30,00 mm	200
Standard	5	951-A-LFDS/05	20.871.255	35,00 mm	100
Standard	6	951-A-LFDS/06	20.871.256	4000 mm	100
Standard	7	951-A-LFDS/07	20.871.257	45,00 mm	100
Standard	8	951-A-LFDS/08	20.871.258	50,00 mm	100
Standard	9	951-A-LFDS/09	20.871.259	55,00 mm	100
Standard	10	951-A-LFDS/10	20.871.260	60,00 mm	50
Standard	11	951-A-LFDS/11	20.871.261	65,00 mm	50
Standard	12	951-A-LFDS/12	20.871.262	70,00 mm	50

RoHS COMPLIANT

© Copyright by WECO
All rights reserved. WECO® is a registered trademarkof WECO Electrical Connectors Inc.
Information provided in this document may be changed without prior notice.
Please refer to our website for the full disclaimer.